Applied Process Control
HSLU, Semester 4

Matteo Frongillo

Last update: March 25, 2026

Contents

1 Control theory and automation **2**
1.1 Closed-loop control . . . 2

2 Controllers **2**
2.1 Disturbance rejection . . . 2
2.1.1 Characteristics . . . 2
2.2 Reference tracking . . . 2
2.2.1 Characteristics . . . 2
2.3 Feedforward control . . . 3
2.3.1 Reference feedforward . . . 3
2.3.2 Disturbance feedforward . . . 3
2.3.3 Reference and disturbance feedforward . . . 4

3 Process model development **4**
3.1 Block diagrams . . . 4

4 Signals and Systems TODO **4**
4.1 Homogeneity . . . 4

5 Linearization **4**
5.1 Linearization example . . . 5
5.1.1 Block diagram . . . 5

1 Control theory and automation

1.1 Closed-loop control

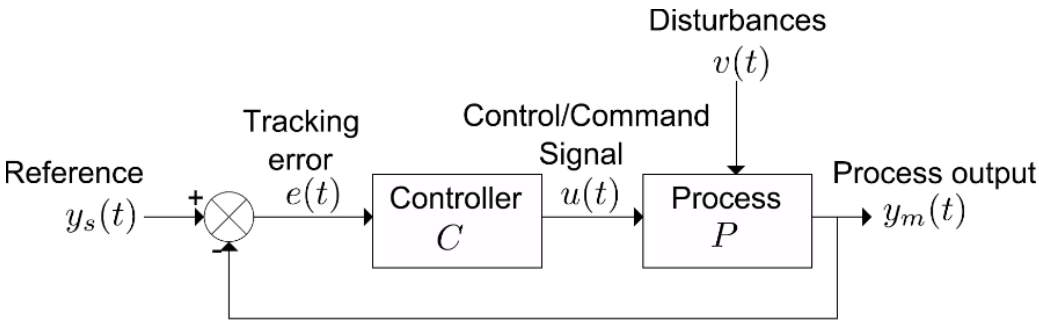

where:

- $y_s(t)$ is the desired or required process output (setpoint).
- $y(t)$ is the actual momentary output of the process. This signal is usually measured by a sensor.
- $e(t) = y_s(t) - y(t)$ is the tracking error.
- $u(t)$ is the input of the process (manipulated variable).
- $v(t)$ is the disturbance variable, which is an unwanted input to the process.

2 Controllers

2.1 Disturbance rejection

Disturbance rejection is the ability of a control system to minimize the impact of external disturbances on the systems output, ensuring that it remains as close as possible to the desired reference. The disturbance rejection behavior quantifies how disturbances influence the process output, with a good disturbance rejection behavior effectively minimizing these influences.

2.1.1 Characteristics

- Disturbance types can be internal (e.g., component variations) or external (e.g., environmental changes)
- Effectiveness: a good controller detects and compensates for disturbances effectively
- Control strategies: feedback control (reactive) and feedforward control (proactive)
- Performance metrics:
  - Stability: ensuring system robustness despite disturbances
  - Steady-state error: minimizing deviation from the desired reference
  - Overshoot/undershoot: controlling excessive deviations
  - Rise time/settling time: ensuring fast and stable system response

2.2 Reference tracking

Reference tracking behavior quantifies the deviation between the reference signal and the process output (tracking error). A good reference tracking behavior minimizes this difference, ensuring the system follows the desired reference as accurately as possible.

2.2.1 Characteristics

- Tracking accuracy: the ability to follow the reference signal with minimal deviation
- Effectiveness: a good controller reduces tracking error across varying conditions
- Control strategies: feedback control (correcting deviations) and feedforward control (anticipating changes)
- Performance metrics:

- Stability: maintaining consistent tracking performance
- Steady-state error: minimizing long-term deviation from the reference
- Overshoot/undershoot: avoiding excessive deviations during tracking
- Rise time/settling time: achieving fast and stable convergence to the reference

2.3 Feedforward control

Feedforward control is a predictive (proactive) control strategy that compensates for known internal and external system influences before they affect the output. Unlike feedback control, which reacts to errors, feedforward control anticipates changes and adjusts the system accordingly to improve performance.

2.3.1 Reference feedforward

- Rapidly compensates for changes in the reference signal, before they impact the system
- Helps the system track the reference more accurately by preemptively adjusting the control input
- Example: If the desired sauna temperature (reference temperature) is increased from 70°C to 90°C, the heaters power is immediately increased based on a precomputed model rather than waiting for feedback

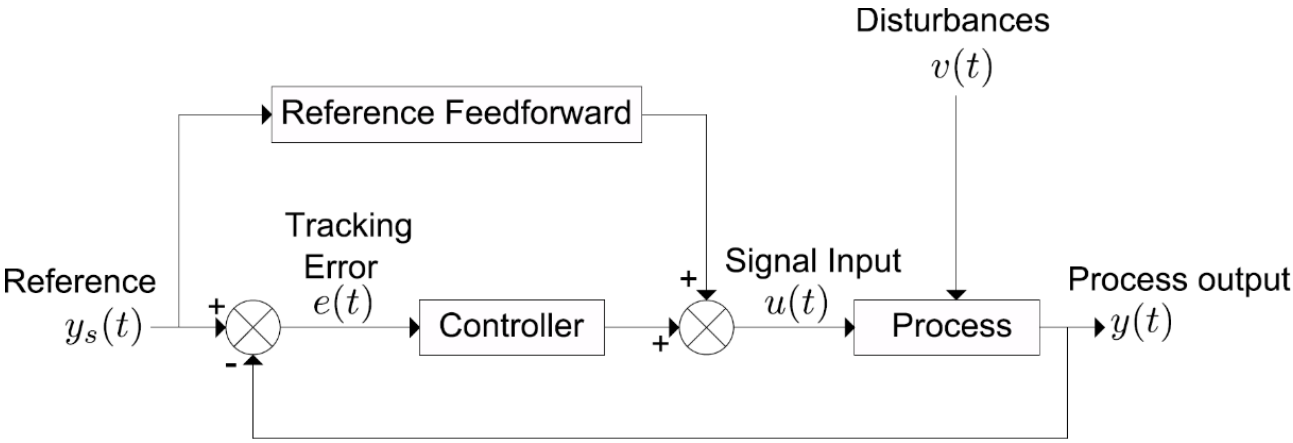

2.3.2 Disturbance feedforward

- Rapidly compensates for measurable disturbances, before they affect the process output
- Works by applying a precomputed correction based on the disturbances expected impact
- Example: If someone opens the sauna door, heat escapes, causing a potential drop in temperature. A feedforward controller detects the door opening and increases heating power preemptively to counteract the expected heat loss, reducing temperature fluctuations

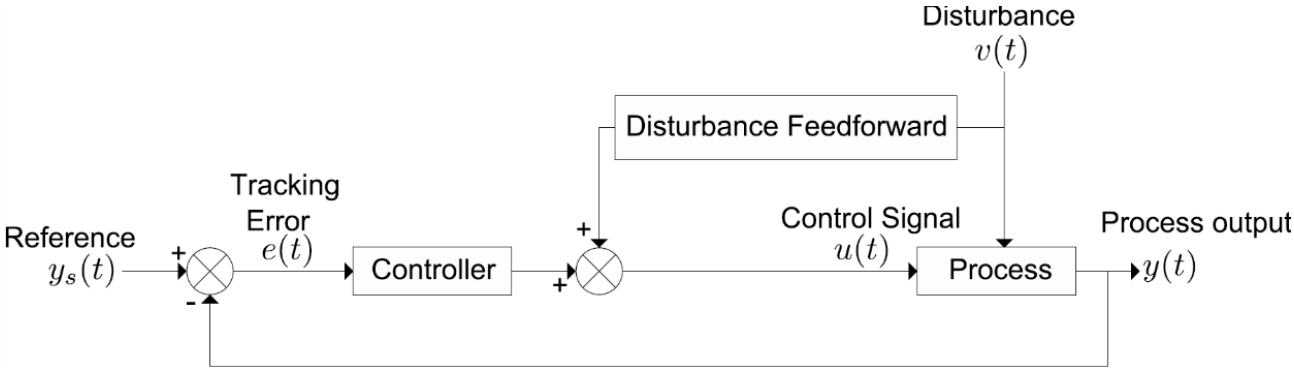

2.3.3 Reference and disturbance feedforward

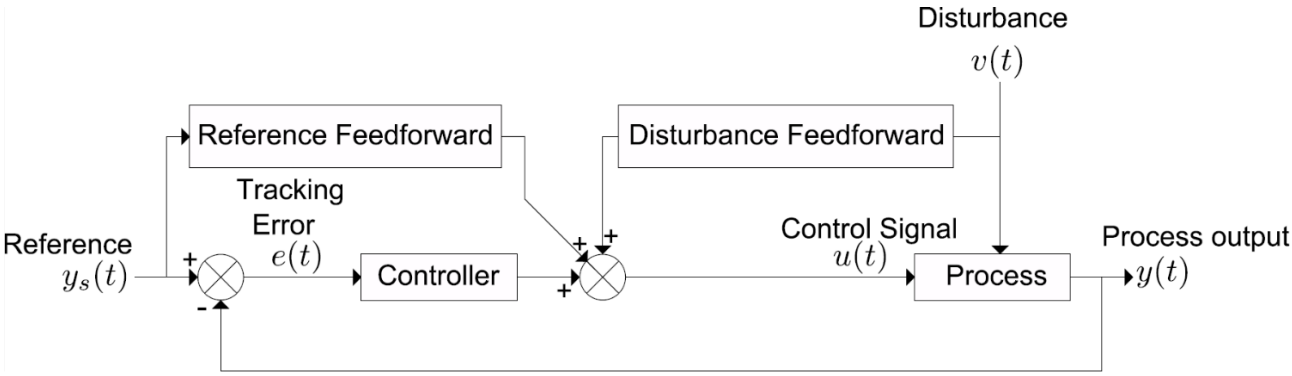

3 Process model development

3.1 Block diagrams

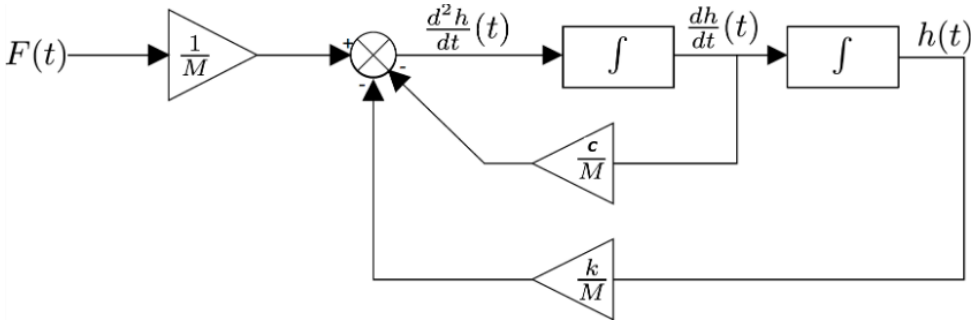

4 Signals and Systems TODO

4.1 Homogeneity

A system h is homogeneous if, for every input $u(t)$ and every scalar α:

$$\boxed{h(\alpha u(t)) = \alpha h(u(t))}$$

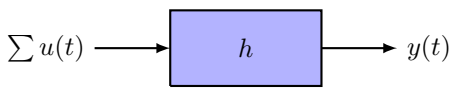

5 Linearization

A line will now be defined as

$$\boxed{w - \bar{w} = \left.\frac{dw}{dh}\right|_{\bar{h}=1} (h - \bar{h})}$$

that can be written also as

$$\Delta w = \dot{w} \Delta h$$

5.1 Linearization example

Nonlinear differential equation:

$$M\ddot{h} + c\dot{h} = Mg - kh^3$$

Define:

$$f(\ddot{h}, \dot{h}, h) = 0 \quad \Longrightarrow \quad M\ddot{h} + c\dot{h} + kh^3 - Mg = 0$$

Calculate the partial derivatives of f at the operating point (steady state):

$$\frac{\partial f}{\partial \ddot{h}} = M \quad \Longrightarrow \quad \left.\frac{\partial f}{\partial \ddot{h}}\right|_{\bar{h}} = M$$

$$\frac{\partial f}{\partial \dot{h}} = c \quad \Longrightarrow \quad \left.\frac{\partial f}{\partial \dot{h}}\right|_{\bar{h}} = c$$

$$\frac{\partial f}{\partial h} = 3kh^2 \quad \Longrightarrow \quad \left.\frac{\partial f}{\partial h}\right|_{\bar{h}} = 3k\bar{h}^2$$

Establish a linear equation using the slopes (partial derivatives):

$$\left.\frac{\partial f}{\partial \ddot{h}}\right|_{\bar{h}} \cdot \Delta\ddot{h} + \left.\frac{\partial f}{\partial \dot{h}}\right|_{\bar{h}} \cdot \Delta\dot{h} + \left.\frac{\partial f}{\partial h}\right|_{\bar{h}} \cdot \Delta h = 0$$

$$\Longrightarrow \quad M\Delta\ddot{h} + c\Delta\dot{h} + 3k\bar{h}^2\Delta h = 0$$

Block diagram form of the linearized system:

$$\Delta\ddot{h} = -\frac{c}{M}\,\Delta\dot{h} - \frac{3k\bar{h}^2}{M}\,\Delta h$$

Note:

$$\Delta h = h - \bar{h} \quad \Longrightarrow \quad h = \Delta h + \bar{h} \qquad \left(\bar{h} = h_0 = \sqrt[3]{\frac{Mg}{k}}\right)$$
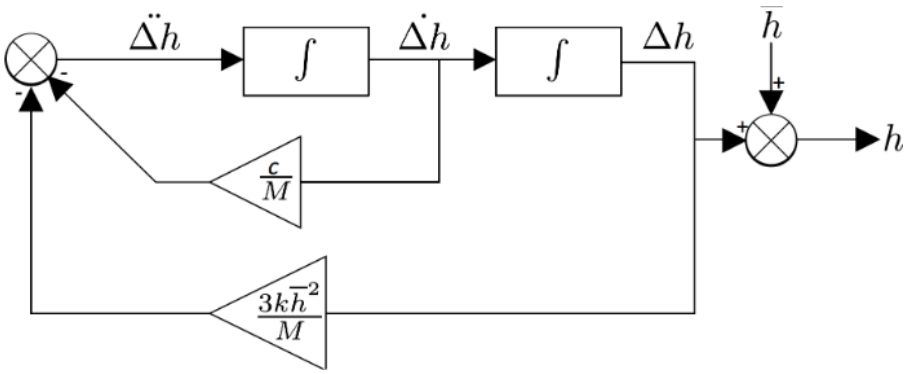
5.1.1 Block diagram